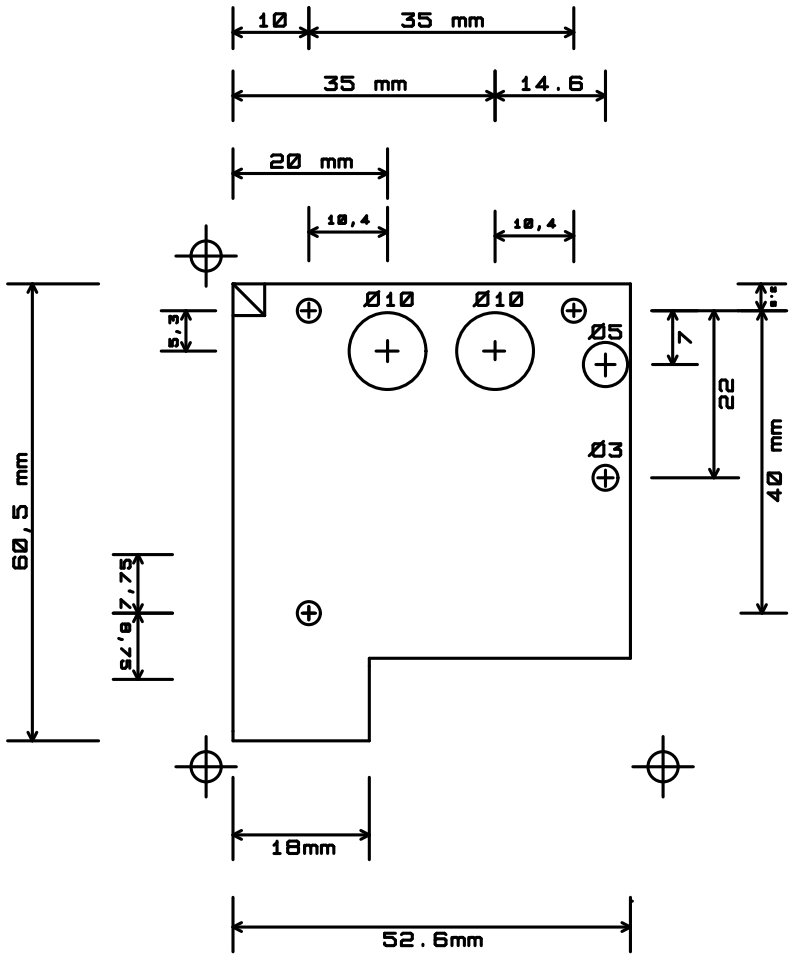

HCFR - Sonde version USB

Ki - Laric 2005

Title: HCFR 2005 - Sonde Colorimetre		
Size: A4	Date: 30 jun 2006	Rev: 2.2
KiCad E.D.A.		Sheet: 1/